7HA.03

THE NEXT EVOLUTION OF THE HA GAS TURBINE

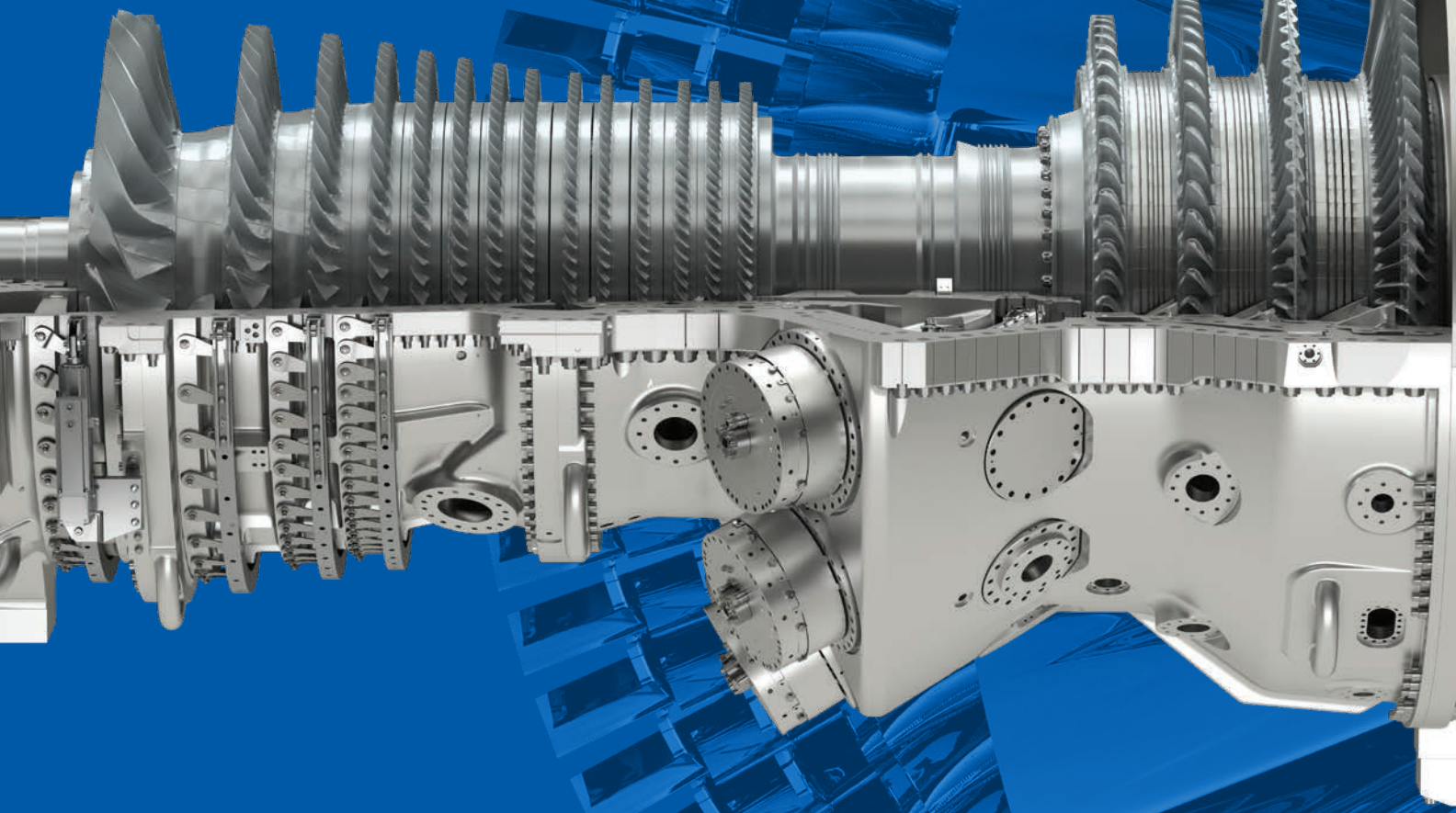

READY TODAY. REINVENTING TOMORROW.

www.ge.com/power/7HA03

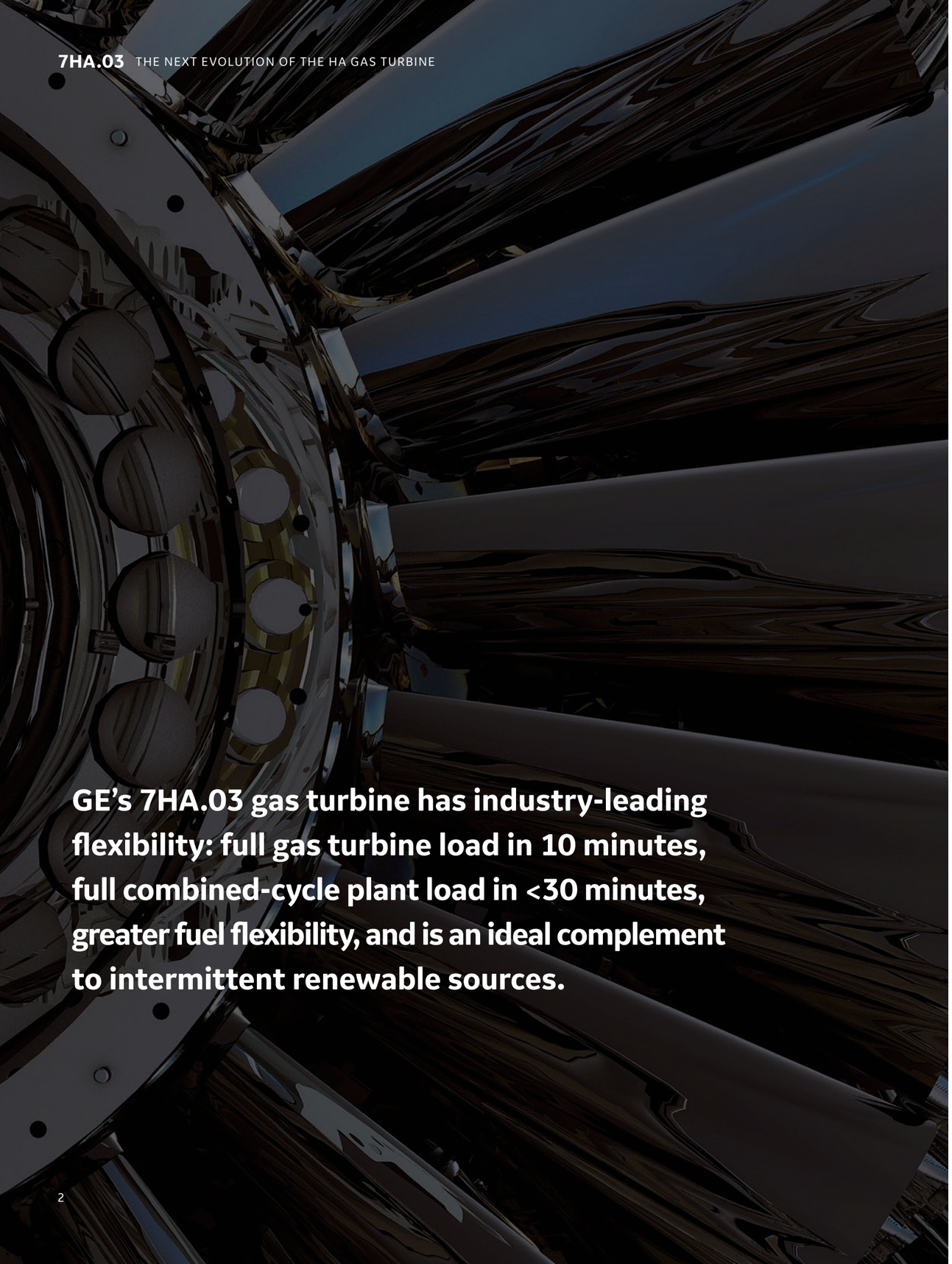

GE's 7HA.03 gas turbine has industry-leading flexibility: full gas turbine load in 10 minutes, full combined-cycle plant load in <30 minutes, greater fuel flexibility, and is an ideal complement to intermittent renewable sources.

The International Energy Agency (IEA) projects total electricity demand will rise by nearly 60% through 2040. For the first time in history, more natural-gas fired power generation capacity is forecast to be added over the next decade than from any other fossil fuel source. In addition, rapid growth in renewables is changing the electricity supply landscape and how gas turbines are being called on to generate power to the grid. The modern power grid needs resources that can ramp up and down, swiftly, efficiently and repeatedly. And, operational flexibility is critical for gas turbines that complement renewable energy as it balances electric system loads and helps maintain grid reliability.

GE's HA gas turbines are the proven product solution to support power producers and their power generation needs.

GE's HA Gas Turbine Technology

GE's heritage is unparalleled in the power generation industry. We led the industry by beginning H-Class technology development 28 years ago and GE was the first to introduce the H System*. Today GE's H-Class—the HA introduced in 2014—combines our experience from first-generation H-Class steam cooled architecture with proven F-Class gas turbine technology.

Our design practices are based on learnings from our entire gas turbine portfolio. In addition, over the past 70 years we've leveraged material science innovations from our history in aviation to gain increased performance at higher firing temperatures.

Today, GE's HA technology is the fastest growing fleet of gas turbines in the world with orders from more than 40 customers in 18 countries. The current fleet has accumulated more than 415,000 fired hours of commercial operation across 40 gas turbines, including 29 7HA's.

Features / Benefits

On-going product evolution is essential to maintaining commercial vitality for our customers. GE's 7HA.03 gas turbine is an evolution of our HA platform, based on our proven HA architecture that maintains design consistency across all fleets:

- Proven 14-stage compressor design
- Retains one set of inlet guide vanes (fully electrical) and three sets of variable stator vanes (fully electrical) and a continued proven use of a Titanium R1 blade row
- 12-can, dry low NOx combustor with axial fuel staging and unibody construction
- Proven 4-stage gas turbine
- And like its HA predecessors, comprehensive full-speed, full-load testing on Test Stand 7 in Greenville, SC, delivering durability improvements and performance upgrades

While retaining a common architecture, the 7HA.03 gas turbine is a step forward in technology that offers power producers 3 key benefits:

1. BETTER GAS TURBINE PERFORMANCE

- Highest capacity 60 Hz gas turbine—a 430 megawatt (MW) gas turbine and ratings in combined cycle application of 640MWs (1x1) and 1,282 MWs (2x1)
- 134 MW's more than the 7HA.02 (2x1 CC), equivalent to powering 100,500 more homes
- Unmatched efficiency available at >64% net combined-cycle, higher than any other competing technology today (2x1 CC), 0.4 % more efficiency than the 7HA.02, saving ~$0.86M a year in the US.
- The 7HA.03's gas turbine rating and fuel efficiency improvements offer customers the lowest $/kwh conversion of gas to electricity.
- Wet compression enables up to a 7% power increase for customers, which is especially useful in hot or tropical climates

2. MOST FLEXIBLE 60 HERTZ GAS TURBINE

- Industry-leading flexibility, full gas turbine load in 10 minutes, full combined-cycle plant load in <30 minutes and is a great complement to intermittent renewable sources
- Improved gas turbine ramp rate—more than 75 MWs per minute, 15 more MWs per min than the 7HA.02
- Double the fuel flexibility of 7HA.02, helping customers manage the changing global gas market and minimize fuel costs by negotiating lower gas contracts

3. LOWER CAPITAL COSTS, DECREASED INSTALLATION AND COMMISSIONING TIME

- Largest combined cycle block of power, driving economies of scale and the lowest installed cost on a $/kwh basis
- GE's continuous gas turbine modularization improvements help minimize installation times, significantly de-risking construction
- Modular packaging configuration shortens the critical path installation cycle by 8 weeks

The 7HA.03 offers several specific design features

Compressor: First developed for the 7F.05 gas turbine, this advanced compressor has accumulated more than 1 million operating hours. It retains the same 14-stage design, same airfoil counts, same material sets, and same pressure ratio from the 7HA.02 gas turbine. The compressor airflow has been increased with the continued use of a Titanium R1 blade row.

Combustor: The 7HA.03 leverages GE's latest combustion technology, the DLN 2.6e. GE first introduced Dry Low NOx (DLN) combustion technology more than 46 years ago. Globally more than 1150 gas turbine are operating with GE's DLN system. Gas turbines with this DLN family of combustors have accumulated more than 75 million operating hours.

The DLN 2.6e combustion system continues to use staged fuel combustion, or axial fuel staging (present on all HA gas turbines). An advanced premixer doubles the fuel flexibility with validated ability to operate on both rich and lean natural gas variants. The design continues to use unibody construction where the liner and transition piece have been combined.

The DLN 2.6e design yields a combustor with higher firing temperature capability, lower emissions, higher durability, lower turndown via a park mode, and higher fuel flexibility.

Turbine: The 7HA.03 has a 4-stage turbine architecture originally introduced in the early 2000's on the steam cooled H but eliminates steam cooling from the hot gas path. The evolved HA design uses passive cooling and proven alloys from both GE's F and H-Class with over 70M fired hours of experience. It does not rely on externally cooled air or the associated heat exchangers that other OEMs require for their advanced gas turbines, offering power producers reduced plant capital costs, a smaller footprint, lower auxillary loads, and decreased operation & maintenance costs through greater availability and reliability.

		7HA.03
SC Plant Performance	SC Net Output (MW)	430
	SC Net Heat Rate (Btu/kWh, LHV)	7,897
	SC Net Heat Rate (kJ/kWh, LHV)	8,332
	SC Net Efficiency (%, LHV)	43.2%
1x CC Plant Performance	CC Net Output (MW)	640
	CC Net Heat Rate (Btu/kWh, LHV)	5,342
	CC Net Heat Rate (kJ/kWh, LHV)	5,636
	CC Net Efficiency (%, LHV)	63.9%
	Plant Turndown – Minimum Load (%)	33.0%
	Ramp Rate (MW/min)	75
	Startup Time (RR Hot, Minutes)	<30
2x CC Plant Performance	CC Net Output (MW)	1,282
	CC Net Heat Rate (Btu/kWh, LHV)	5,331
	CC Net Heat Rate (kJ/kWh, LHV)	5,624
	CC Net Efficiency (%, LHV)	64.0%
	Plant Turndown – Minimum Load (%)	15.0%
	Ramp Rate (MW/min)	150
	Startup Time (RR Hot, Minutes)	<30

NOTE: All ratings are net plant, based on ISO conditions and natural gas fuel. Actual performance will vary with project-specific conditions and fuel.

7HA.03 Combined Cycle Power Plant

GE has global expertise managing large scale power projects — for more than 70 years we've designed combined cycle power plants, longer than any other OEM. We draw on a rich history of technology and innovation, developing advanced materials, cooling, aerodynamics, combustion and controls technologies to enhance gas turbine-based power generation.

The 7HA.03 combined cycle power plant is now available at >64% net combined-cycle efficiency; higher than any other 60 Hz competing technology today on an industry standard basis. Performance of the HA combined cycle power plants has exceeded expectations, proven by comparing actual tested output and efficiency to contractual guarantees. The first 40 HA gas turbine plants operating in the field today have met or exceeded performance guarantees and are successfully generating electricity at various site conditions on their grids around the world.

GE works with EPC partners to design power plants that are flexible in their operation and include features our customers care about—fast start, load ramping, low turndown, fuel variation, and high part-load efficiencies. This flexibility delivers improved plant economics:

- Reduced capital, operations and maintenance costs
- Shorter installation times
- Faster revenue production

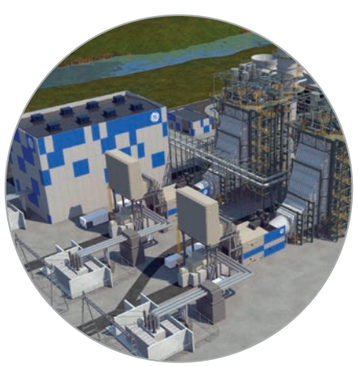

GE's 7HA.03 gas turbine is the highest capacity 60 Hz gas turbine with a rating of over 430 MW and combined cycle outputs of 640 MW (1x1) and 1,282 (2x1).

Constructability

Meeting plant construction milestones is critical to project success. The 7HA.03 gas turbine enclosure features modular architecture with valves, piping, and electrical systems packaged into stackable modules that allow for simultaneous installation and reduced safety concerns.

GE offers the following upgrades specifically for EPCs:

- Shortened critical path installation cycle by eight weeks compared to F-Class
- Reduced labor hours by 13,000 compared to F-Class

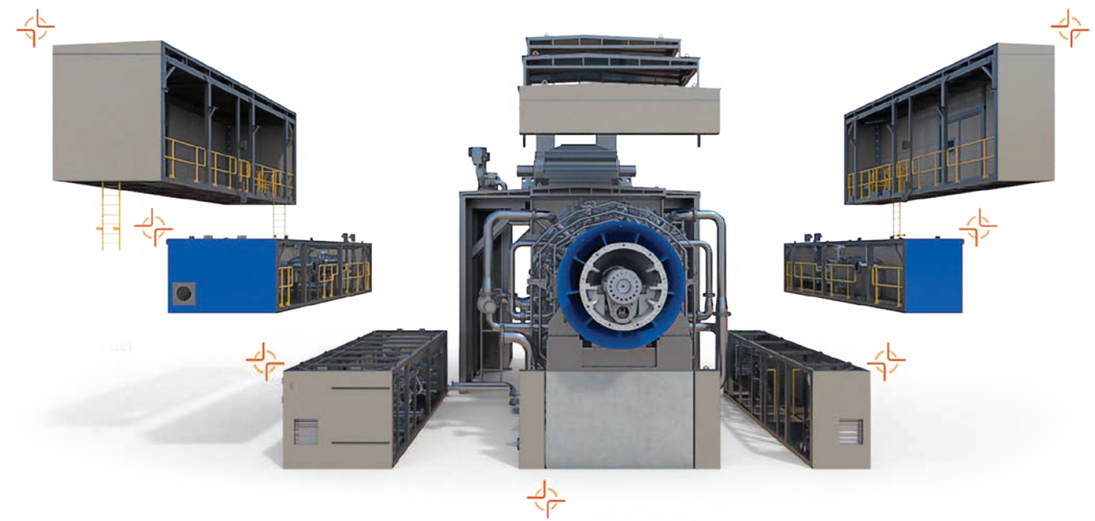

98% REDUCTION IN FIELD-INSTALLED VALVES

64% REDUCTION IN ELECTRICAL TERMINATION POINTS

63% REDUCTION IN FIELD CONNECTIONS

55% REDUCTION IN TURBINE FIELD WELDS

The 7HA.03 Gas Turbine modular packaging configuration shortens the critical path installation cycle by eight weeks compared to F-Class products.

Validation and Testing

The 7HA.03 gas turbine is built on our heritage of continuous improvement and innovation based on our testing capabilities.

GE has the world's largest most comprehensive full speed full load gas turbine test facility known as Test Stand 7. Located in Greenville, SC (USA), this world-class facility provides full-scale, full-load validation for 50 Hz and 60 Hz gas turbine systems. No other gas turbine manufacturer offers a test stand that can test both 50 Hz and 60 Hz products at this level of rigor. This facility has enabled the most thorough validation of GE's new heavy-duty gas turbines, in advance of the first units' commercial operation. Our program accelerates gas turbine performance, operability, reliability and quality by thoroughly validating the core technologies in the laboratory / factory environment.

Test Stand 7 operates the gas turbine independent from the restriction of the power grid, enabling a much wider testing envelope than an on-grid facility. This level of testing validation is comparable to a gas turbine operating well beyond 8,000 hours connected to a grid. Isolation from the grid facilitates off-speed (90%-110%) operation at a range of equivalent loaded conditions, and variable speed enables testing at ambient temperatures equivalent to a range from -37°C to 85°C.

The testing allows GE to fully understand the hardware boundaries and, in some cases, make necessary modifications, map the operating limits and identify growth capability.

GE continues its validation beyond the Test Stand. Our Fleet Leader Program—which starts at commercial operation and extends through the first hot gas path inspections—is an important second step to carefully, monitor, adjust and update equipment with on inspection, data collection and analysis on new gas turbine technology.

The program includes increased inspections and monitoring with frequent borescope and mini combustion inspections in addition to full maintenance inspections. This allows GE to collect valuable data and information to improve hardware for long-term operation with maximum reliability and availability.

The 7HA.03 is expected to begin validation testing in early 2021.

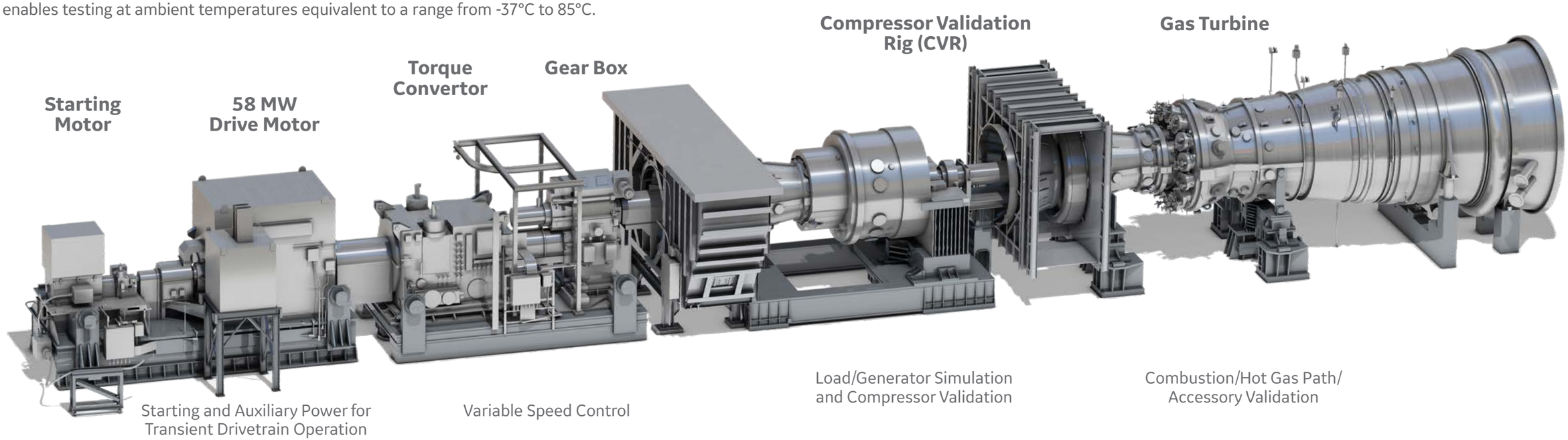

GE's 7HA.03 Gas Turbine has unmatched efficiency available at >64% net combined-cycle efficiency; higher than any other competing 60 Hz technology today.

GE's 7HA.03 leverages the latest advanced technology by utilizing advanced gas turbine materials, coating and cooling designs to improve output, efficiency and flexibility.

Services

GE offers advanced technology installation, maintenance and upgrade solutions across total power generation plant assets to more than 2,800 customers in 150+ countries spanning six continents.

The insights our team has already gained from operating data and on-site observations are fueling advances in our maintenance, repair and upgrade planning for the HA fleet. H-Class turbines feature a quick-removal shell, field-replaceable blades and advanced inspection coverage for all blades.

Our short-cycle inspection processes include:

- Combustion and Hot Gas Path inspections in less than 22 days
- Major inspections in less than 29 days

We continue expanding our breadth of HA expertise with a rigorous 4-module training curriculum covering all aspects of fleet services and outage execution—over the next year we will double the size of our HA services team around the globe with this training.

Based on experience, and feedback from our field teams, we are already refining our suite of HA tools to drive shorter cycle times while maintaining high quality service execution. The new TRACC scan tool has reduced the time it takes to align inner turbine shell with rotor during reassembly by 75%, and refinements to the inner turbine shell roll-out kit has cut hot gas path inspection time in half since the first HA outages in 2017.

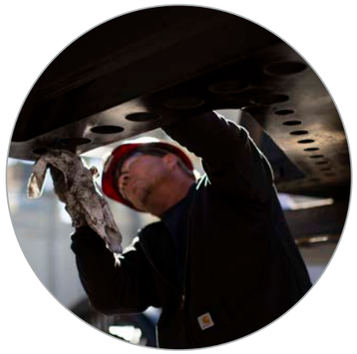

Over its lifecycle, the total cost of ownership is 5% lower than F-Class, and the lowest in the industry—driven by capex from the largest turbine output in its class, simplified design, lower fuel cost from industry-leading efficiency, extended maintenance intervals, and reduced maintenance cost for H-Class technology.

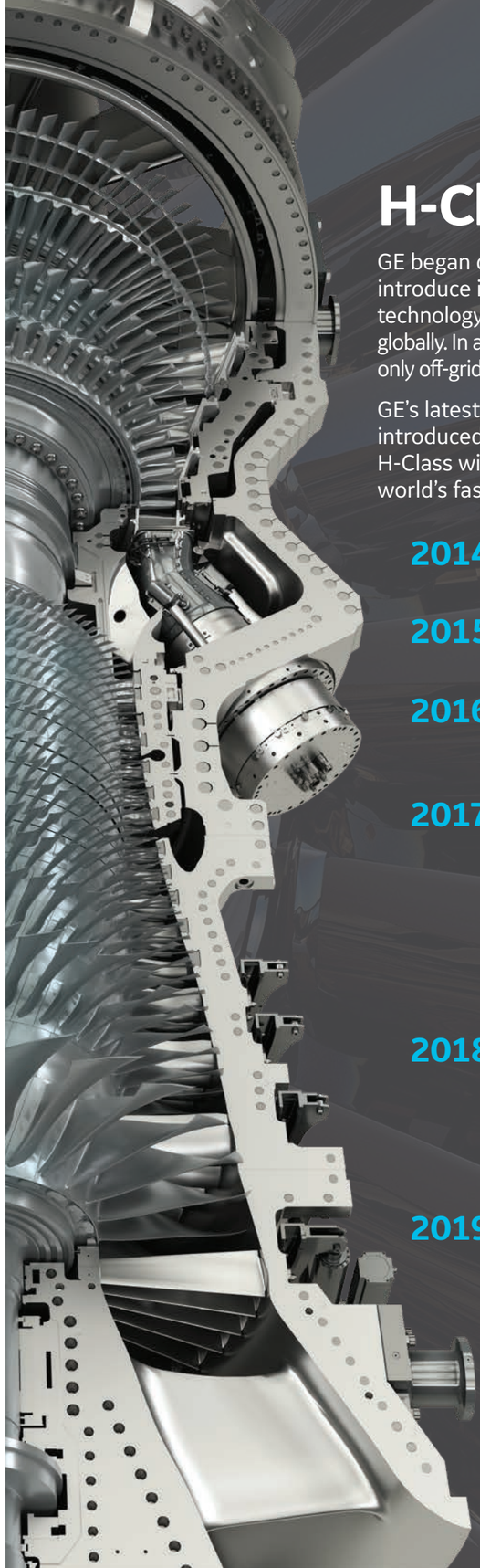

H-Class Timeline

GE began developing H-Class technology 28 years ago, being the first to introduce it to the industry. Over the next decade this first-generation technology achieved several milestones, as well as commercial operation globally. In addition, GE debuted Test Stand 7 in Greenville, SC (US), the industry's only off-grid full-speed, full-load gas turbine test facility for 50 and 60 Hz units.

GE's latest H technology — the HA gas turbine which the company introduced in 2014 — combines experience from this first-generation H-Class with proven F-Class gas turbine technology. Today the HA is the world's fastest-growing fleet of gas turbines.

2014 GE introduces 7HA & 9HA next-generation H-Class gas turbines, securing orders from France, Japan, Russia, and the United States

2015 GE celebrates production and shipment of its 1st 9HA for EDF's Bouchain power plant in France

2016 EDF's plant in Bouchain, France — powered by GE's 9HA gas turbine — sets the world record as the most efficient combined cycle plant in the 50 Hz segment with 62.22% net efficiency

2017 GE announces the 9HA is available at 64%+ efficiency in combined cycle power plants, higher than any other competing technology, achieved largely due to advances in additive manufacturing & combustion breakthroughs

EDF's 9HA power plant in Bouchain, France is named 2017 Top Gas Plant by Power Magazine

Power Engineering names Exelon's Wolf Hollow II Power Plant in Texas (US) as Best Gas Fired Project of the Year

2018 Chubu Electric's Nishi Nagoya plant in Japan — powered by GE's 7HA gas turbine — sets the world record for 63.08% gross combined cycle efficiency

Power Magazine names Chubu Electric's Nishi Nagoya and Tennessee Valley Authority's Allen's sites — powered by GE's flagship HA gas turbines — as 2018 Top Gas Power Plant Projects

2019 GE's 9HA.02 gas turbine starts full-speed, full-load testing in Greenville, SC (USA), GE's 5th product to advance through this rigorous validation testing

GE's H-Class achieves more than 415,000 operating hours of commercial experience across 40 gas turbines

GE announces its 100th HA gas turbine ordered

GE introduces the 7HA.03 gas turbine, the next evolution of the HA platform and the world's largest, most efficient, flexible gas turbine with the lowest cost conversion of gas to electricity for 60 Hz customers

GE's H-Class products hold two world records for efficiency; one in 50 Hz with our 9HA.01 in Bouchain, France and one in 60 Hz with our 7HA.01 in Nagoya, Japan.

www.ge.com/power/7HA03

© 2019 General Electric Company. All rights reserved.

GEA34372 (09/2019)